MOTORS FOR SCREWDRIVING APPLICATIONS WITH SLIP-TRK CLUTCH

Data sheet
SALGS3D FR

SALGS FR SERIES - Non-reversible

WATT: 480 / CONSUMPTION: 870 Nl/1'

Data measured at pressure of 6 bar - Minimum supply hose diameter: 10 mm



1. 1/4" hexagonal bit holder connection
2. Grip zone
3. Air inlet
4. Air exhaust

Technical specification

Right rotation - Model	SALGS3D FR
Right rotation - Code	8604303
No-load speed - rpm/min	800
Torque Nm - Nm	22,8
Screws tightening	M6-M8
Clutch spring	Neutral
Clutch unit	7311143

Form features

Allow the tightening torque to be adjusted through a friction clutch.
Output shaft with axial sliding (3 mm), on request without scrolling.
Standard bit holder coupling 1⁄4" (6.35 mm).

MOTORS FOR SCREWDRIVING APPLICATIONS WITH SLIP-TRK CLUTCH

Data sheet
SALGS3D FR

SALGS FR SERIES - Non-reversible

WATT: 480 / CONSUMPTION: 870 Nl/1'

Data measured at pressure of 6 bar - Minimum supply hose diameter: 10 mm

Overall dimensions

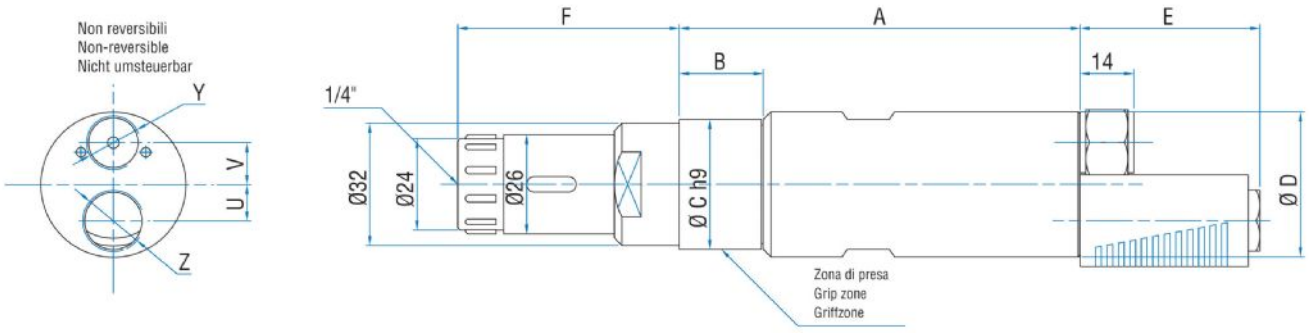

Model	Code	A	B	C	D	E	F	U	V	Y	Z
SALGS3D FR	8604303	168,5	51,5	40	42	47	56,9	11	13	1/4"	3/8"